KERN & Sohn GmbH
Ziegelei 1
D-72336 Balingen
E-Mail: info@kern-sohn.com
Phone: +49-[0]7433- 9933-0
Fax: +49-[0]7433-9933-149
Internet: www.kern-sohn.com

Operating manual
Electronic Crane Scales

Logbook
Regular maintenance and care

KERN HFD

Version 1.0
2017-09
GB



HFD-BA-e-1710

GB

KERN HFD

Version 1.0 2017-09

Operating instructions / logbook
Electronic Crane Scales

Contents

1. Technical data 4

1.1 Dimensions (mm) 6

1.2 Type plate 8

2. Declaration of conformity 8

3. General Safety Instructions 9

4. The crane scales at a glance 12

4.1 Overview 12

4.2 Operating elements 13

4.3 Radio remote control 14

4.4 Label 14

5. Commissioning 15

5.1 Unpacking 15

5.2 Checking the original dimensions 15

5.3 Rechargeable battery operation 16

5.4 Suspending the balance 17

6. Operation 18

6.1 Safety instructions 18

6.2 Loading the crane scales 19

6.3 Turn on/off 22

6.4 Set balance to zero 22

6.5 Taring 23

6.6 Weighing 23

6.7 Record weight value (freeze) 23

6.8 Totalization 24

7. Menu 25

7.1 Description of individual functions 27

7.1.1 Automatic switch-off function „AUTO OFF“ 27

7.1.2 Display background illumination 27

8. Adjustment 28

9. Error messages 29

10. Maintenance, Repair, Cleaning and Disposal 30

10.1 Cleaning and Disposal 30

10.2 Regular maintenance and care _____ 30
10.3 Checklist „Regular maintenance“, (see chapter 10.3) _____ 32
11. Enclosure _____ 35
11.1 Checklist „Enhanced maintenance“ (General revision) _____ 35
11.2 List „Spare parts and repair of safety-relevant parts“_____ 36

1. Technical data

KERN	HFD 600K-1	HFD 1T-4	HFD 3T-3
Readability (d)	0.1 kg; 0.2 kg	0.1 kg; 0.2 kg; 0.5 kg	0.2 kg; 0,5 kg; 1 kg
Weighing range (max)	300 kg; 600 kg	300 kg; 600 kg; 1,500 kg	600 kg; 1,500 kg; 3,000 kg
Taring range (subtractive)	599.8 kg	1,499.5 kg	2,999 kg
Reproducibility	0.1 kg; 0.2 kg	0.1 kg; 0.2 kg; 0.5 kg	0.2 kg; 0.5 kg; 1 kg
Linearity	±0.2 kg; ±0.4 kg	±0.2 kg; ±0.4 kg; ±1 kg	±0.4 kg; ±1 kg; ±1 kg
Recommended adjustment weight, not added (class)	600 kg (M1)	1 t (M1)	3 t (M1)
Stabilisation time	2 s		
Precision	0.2 % of max.		
Warm-up time	10 min		
Unit	kg		
Allowable ambient temperature	-10…+40 °C		
Relative humidity	0 to 80 %, non-condensing		
Input voltage Mains adapter	110V - 240V AC 50 – 60Hz		
Input voltage Appliance	12 V, 500 mA		
Rechargeable battery (standard equipment)	7.4 V 5200mAh Operating period 50 h (background illumination ON) Operating period 80 h (background illumination OFF) Loading time 12 h		
Display	30 mm		
Housing material	Metal, lacquered		
Material of shackle	non-alloyed forged steel		
Net weight (kg)	9	9	10
Remote control (standard equipment)	Battery Size 23A (1 x 1.5V) W x D x H 48 x 16 x 95 mm		

KERN	HFD 6T-3	HFD 10T-3
Readability (d)	0.5 kg; 1 kg; 2 kg	1 kg; 2 kg; 5 kg
Weighing range (max)	3,000 kg; 6,000 kg	3,000 kg; 6,000 kg; 15,000 kg
Taring range (subtractive)	5,998 kg	9,995 kg
Reproducibility	0.5 kg; 1 kg; 2 kg	1 kg; 2 kg; 5 kg
Linearity	±1 kg; ±2 kg; ±4 kg	±2 kg; ±4 kg; ±10 kg
Recommended adjustment weight, not added (class)	6 t (M1)	10 t (M1)
Stabilization time	2 s	
Precision	0.2 % of max.	
Warm-up time	30 min	
Unit	kg	
Allowable ambient temperature	-10…+40 °C	
Relative humidity	0 to 80 %, non-condensing	
Input voltage Mains adapter	110V - 240V AC 50 – 60Hz	
Input voltage Appliance	12 V, 500 mA	
Rechargeable battery (standard equipment)	7.4 V 5200mAh Operating period 50 h (background illumination ON) Operating period 80 h (background illumination OFF) Loading time 12 h	
Display	30 mm	
Housing material	Metal, lacquered	
Shackle	non-alloyed forged steel	
Net weight (kg)	15	20
Remote control (standard equipment)	Battery Size 23A (1 x 1.5V) W x D x H 48 x 16 x 95 mm	

1.1 Dimensions (mm)

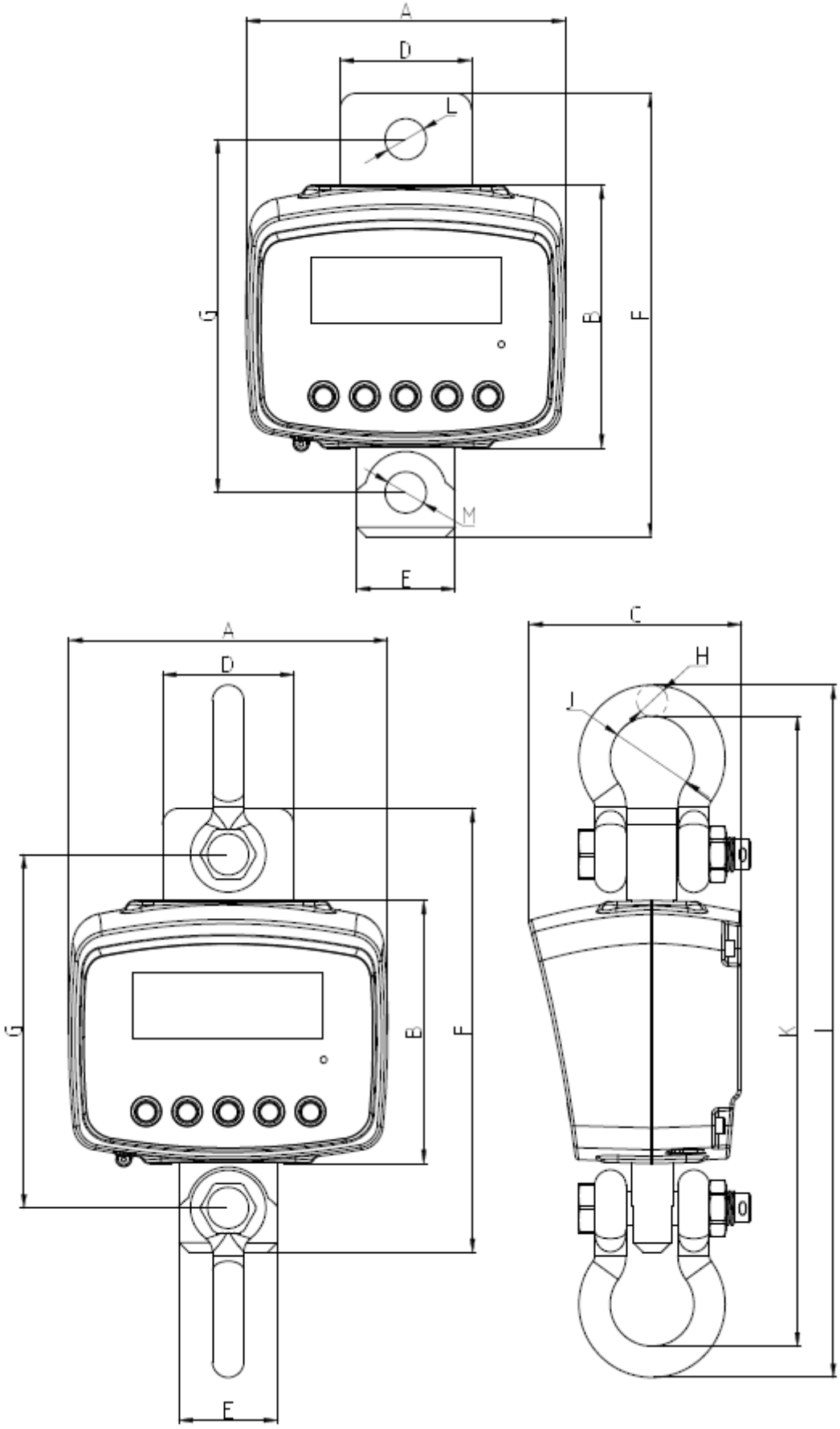

Dimensions [mm] / Capacity / Model	**600 kg HFD 600K-1**	**1,5 T HFD 1T-4**	**3 T HFD 3T-3**	**6 T HFD 6T-3**	**12 T HFD 10T-3**
A	194	194	194	194	194
B	160	160	160	160	160
C	129	129	129	129	129
D	80	80	80	95	95
E	60	60	60	80	80
F	270	270	275	320	330
G	219	219	219,5	248	247,5
H	Ø 19	Ø 19	Ø 22	Ø 25,4	Ø 31,75
I	422	422	457	518	584
J	Ø 50,8	Ø 50,8	Ø 58	Ø 68,3	Ø 82,5
K	384	384	413	467,2	520,5
L	Ø 23	Ø 23	Ø 26,5	Ø 30	Ø 36
M	Ø 23	Ø 23	Ø 26,5	Ø 30	Ø 36

1.2 Type plate



1	KERN logo
2	Model designation
3	Weighing range [Max]
4	Data for power supply
5	Company address
6	Readability [d]
7	Date of manufacture
8	CE mark
9	Disposal mark
0	Serial number

2. Declaration of conformity

The current EC/EU Conformity declaration can be found online in:

www.kern-sohn.com/ce

3. General Safety Instructions

Duties of the owner-operator

Follow the national accident prevention regulations as well as the working, operating and safety regulations of the owner-operator.

- Observe all safety regulations of the crane manufacturer.
- The balance may only be used for the proposed purpose. Any type of use which is not specified in these operating instructions, will be considered as improper use. The customer is solely responsible for material damage and injury of persons resulting from an improper use, Messrs. KERN & Sohn will not be liable under any circumstance.
  Messrs . KERN & Sohn cannot be held liable, if the crane scales are modified or used improperly and if damage is resulting from such use.
- Inspect and service crane balance, crane and load suspension devices regularly (see chap. 10).
- Log the test result and keep it in the logbook.

Organizational measures

- Only trained and instructed staff may operate the balance.
- Make sure that the operating instructions are kept nearby the operation site of the crane scales.
- Assembly, commissioning and maintenance should only be carried out by trained specialists.
- Repair of safety-relevant pieces may only be carried out by KERN or by service partners authorized by Messrs. KERN. (competence certificate or training).
- Use original spare parts only.
- All repairs and spare parts must be documented by the service partner (see list, chap. 11.2).
- All maintenance works must be documented (see checklist chap. 10.3).
- Load suspending components may only be exchanged as a complete spare parts set. The dimensions of the new components must be noted (see checklist chapter 10.4).

Environmental conditions

- Never operate the crane scales in explosive environment. The serial version is not explosion protected.
- Operate the crane scales only under environmental conditions as specified in these operating instructions (especially in chapter 1 „Technical data“).
- Do not expose the crane scales to strong humidity. Non-permitted condensation (condensation of air humidity on the appliance) may occur if a cold appliance is taken to a considerably warmer environment. In this case, acclimatize the disconnected appliance for ca. 2 hours at room temperature.
- Do not operate the crane scales in corrosive environment.
- Protect the crane scales against high humidity, vapours and dust.

- Major display deviations (incorrect weighing results) may be experienced should electromagnetic fields (e.g. due to mobile phones or radio equipment), static electricity accumulations or instable power supply occur. Change location or remove source of interference.

Proper use
The balance you purchased is intended to determine the weighing value of material to be weighed. It is intended to be used as a “non-automatic“ balance, i.e. the material to be weighed is suspended on the crane hook only vertically, manually, carefully and without jerks. As soon as a stable weighing value is reached the weighing value can be read.

- Use the crane scales only for lifting and weighing of freely movable loads.
- Danger of injury due to improper use. Not allowed are e.g.:
  - Exceeding the allowed nominal load of crane, crane scales or any type of load attachment devices
  - Conveying persons,
  - Pulling loads over an inclined surface,
  - Tearing-off, pulling or towing loads.
- Modifications or reconstructions of the crane scales or of the crane are not allowed.

Improper Use
Do not use balance for dynamic weighing. In the event that small quantities are removed or added to the material to be weighed, incorrect weighing results can be displayed due to the “stability compensation“. (Example: Slowly draining fluids from a container suspended on the balance.) Do not leave permanent load suspended on the balance. This may damage the measuring system as well as safety-relevant parts.

The balance may only be used according to the described conditions. Other areas of use must be released by KERN in writing.

Warranty
Warranty claims shall be voided in case

- Our conditions in the operation manual are ignored
- The appliance is used outside the described uses
- The appliance is modified or opened
- Mechanical damage and damage caused by media, liquids,
- Natural wear and tear
- The appliance is improperly set up or incorrectly electrically connected
- The measuring system is overloaded

Safe working
- Do not stand underneath suspended loads!
- Position the crane in a way that the load is lifted vertically.
- When working with the crane and crane scales wear personal safety equipment (helmet, safety shoes etc.).

Monitoring of Test Resources
In the framework of quality assurance the measuring-related properties of the balance and, if applicable, the testing weight, must be checked regularly. The responsible user must define a suitable interval as well as type and scope of this test. Information is available on KERN's home page (www.kern-sohn.com with regard to the monitoring of balance test substances and the test weights required for this. In KERN's accredited DKD calibration laboratory test weights and balances may be calibrated (return to the national standard) fast and at moderate cost.

Testing upon acceptance
When receiving the appliance, please check packaging immediately, and the appliance itself when unpacking for possible visible damage.

Initial Commissioning
In order to obtain exact results with the electronic balances, your balance must have reached the operating temperature (see warming up time chap. 1).
During this warming up time the balance must be connected to the power supply (mains, accumulator or battery).
The accuracy of the balance depends on the local acceleration of gravity.
Strictly observe hints in chapter Adjustment.
For checking original dimensions, s. chap. 5.2

Shutdown and storage
- Take off the crane scales from the crane and dismantle all load attachment devices from the crane scales.
- Do not store the crane scales at open air

4. The crane scales at a glance

The crane scales are a multi-purpose and cost-saving solution for overhead weighing applications such as e.g. recycling, metal processing, machine engineering, transport and logistics.
With the radio remote control, operation will be more comfortable yet.

4.1 Overview



Fig.1: Front view of balance

1 Upper shackle
2 Display
3 Keyboard
4 Lower shackle



Fig.2: Radio remote control (similar illustration)

5 Antenna
6 Keyboard

4.2 Operating elements



Overview of display:

[▼] over the symbol appears if

	the rechargeable battery is being charged
	the capacity of the rechargeable battery is exhausted
HOLD	the data-hold function is active
NET	the scales have been tared
	the weight display is stable
a	the weight is in the area around the zero point

Keyboard overview:

Button	Description of function
HOLD	• Record weight value (freeze) • Shift decimal point (adjustment mode)
M+	• Totalization • Number selection to the right • Exit menu
TARE	• Taring
a	• Zeroing
ON/OFF	• Turn on or off the balance

4.3 Radio remote control

The balance can be operated by the radio remote control like by a keyboard. All functions (excepted **ON/OFF**) can be selected.

The red LED must light up when any button is pressed. If it does not light up, the batteries in the remote control must be exchanged.

Range on free surface (free of buildings) approx. 20 m.

4.4 Label



⇨ Do not stand or go under suspended loads.

⇨ Do not use on building site.

⇨ Keep an eye on suspended loads.



(example)

⇨ Do not exceed nominal load of crane scales.



⇨ The product conforms to the requirements of the German Equipment and Product Safety Act.

5. Commissioning

Attention: Always observe chapter 3 "General Safety Instructions"!

5.1 Unpacking

 **SAFETY INSTRUCTIONS for protection against break**	**Once delivered and unpacked, crane scales will not be taken back.**
	The crane scales have been sealed by Messrs. KERN. ⇨ Load suspension devices are sealed by an adhesive tape. ⇨ The packaging is also sealed by adhesive tape. ☞ **Broken seal obliges to purchase.**
	Thanks for your comprehension. Your KERN Quality assurance team
 **CAUTION** **Danger for the back!**	**The crane scales are compact and quite heavy.** ⇨ Remove the scales from packaging only with the help of a second person. ⇨ Use a lifting device such as a crane or a forklift truck. ⇨ Secure the scales that they cannot fall down when they are lifted.

Only use original packaging for returning.

⇨ Make sure that all parts are completely present.
- Crane scales
- Mains adapter
- Remote control
- Operating instructions (logbook)

5.2 Checking the original dimensions

⇨ Enter the original dimensions shown on the production data sheet in the grey fields of the checklist chap. 10.4.

⇨ Check original dimensions of crane balance; for implementation see chap. 10.3"Regular Maintenance"

⇨ Enter all data (date, tester, results) in the first line under "Inspection before first use" in the checklist (see chapter 10.4)

 **CAUTION**	If the dimensions of your first safety inspection do not match those of KERN, the balance must not be put into operation. In this case please contact a service partner authorised by Messrs. KERN.

5.3 Rechargeable battery operation

 **CAUTION**	**Material damage on crane scales** ⇨ Only use the delivered mains adapter. ⇨ Make sure that the mains adapter, the cable and the mains plug are in a perfect condition. ⇨ Do not use the crane scales during the loading process.

Before the first use, the rechargeable battery should be charged by connecting it to the mains power cable for at least 24 hours. The operating time of the rechargeable battery is approx. 60 hours.
The capacity of the rechargeable battery will soon be exhausted, when the display begins to flicker. If "**lo_bat**" appears, the balance will remain operable for approx. 30 minutes more, then it switches off automatically. Connect the power cable as soon as possible to load the rechargeable battery.
The LED display over  provides information about the battery's charging status.

red: Voltage has dropped below prescribed minimum.

green: Rechargeable battery completely reloaded

yellow: Charging storage battery

To save the battery, the balance switches automatically off without weighing (time can be selected, see chap. 7.2. Function "F9 of")

When the crane scales are out of operation for a longer period, remove the rechargeable battery.

5.4 Suspending the balance

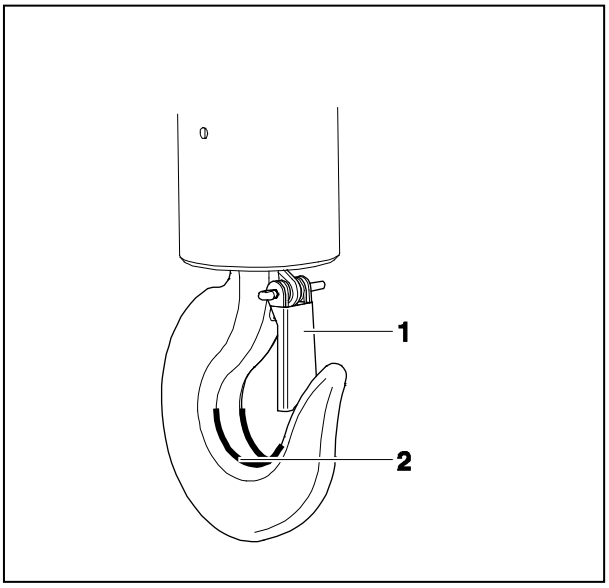

Condition
The crane needs a safety bracket (1) that the unloaded crane scales cannot fall down.
If the safety bracket is missing or damaged, please contact the crane manufacturer in order to receive a hook with this safety equipment.

⇨ Suspend the crane scales on the lower hook of a crane and close the safety bracket.
The crane scale’s upper eyelet should rest in the saddle (2).

6. Operation

6.1 Safety instructions

<table>
<tr>
<td></td>
<td>
Danger
Risk of injury due to falling loads!</td>
</tr>
<tr>
<td></td>
<td>⇨ Take great care when operating the crane and follow the general rules for crane operation.
⇨ Check all parts (hook, eyelet, rings, rope slings, cables, chains etc.) for excessive wear or damage
⇨ If faults can be seen on the safety bracket of the hook or if it is missing completely, the balance must not be used
⇨ Work only with appropriate speed
⇨ Always avoid vibrations and horizontal forces. Avoid any kind of shock, torsion and oscillating (e.g. caused by inclined suspending)
⇨ Do not use the crane scales for transporting loads.</td>
</tr>
<tr>
<td></td>
<td>⇨ Do not stand or go under suspended loads.</td>
</tr>
<tr>
<td></td>
<td>⇨ Do not use on building site.</td>
</tr>
<tr>
<td></td>
<td>⇨ Keep always an eye on suspended loads.</td>
</tr>
<tr>
<td>

(example)</td>
<td>⇨ Do not exceed the nominal load of crane, crane scales or any kind of load attachment devices at the crane scales.

⇨ When weighing dangerous goods such as melted mass, radioactive material), observe the prescriptions for handling dangerous goods!</td>
</tr>
</table>

6.2 Loading the crane scales

For good weighing results observe the following, illustrations see next page:

- ⇨ Only use load attachment devices which guarantee a one-spot suspension and where the scales can be suspended freely.
- ⇨ Do not use too large load attachment devices which do not guarantee any one-spot suspension.
- ⇨ Do not use multiple suspensions.
- ⇨ Do not pull or push the load or the loaded balance.
- ⇨ Do not pull the hook horizontally.

Loading the balance

1. Position the crane scales over the load.
2. Move downwards the crane scales until the load can be suspended on the balance. Reduce the speed when the respective height is going to be reached.
3. Suspend a load. If necessary, ensure that the safety bracket is closed. If the load is fixed by slings, ensure that the slings rest completely on the saddle of the load attachment device.
4. Lift-off the load slowly.

   When the load is fixed by slings, ensure that the load is well balanced on both sides and that the slings are correctly positioned



Only use load attachment devices which guarantee a one-point suspension and where the scales can be suspended freely.

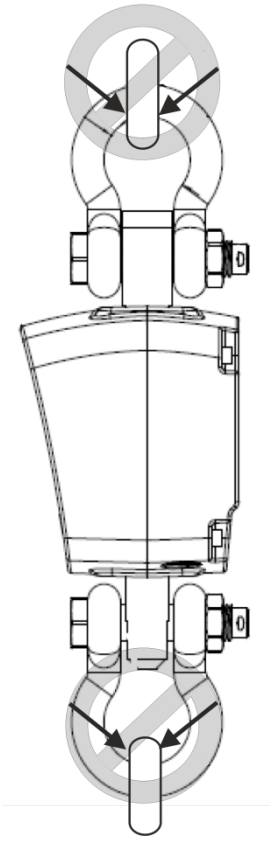

Do not use too large load attachment devices which cannot guarantee a one-point suspension.

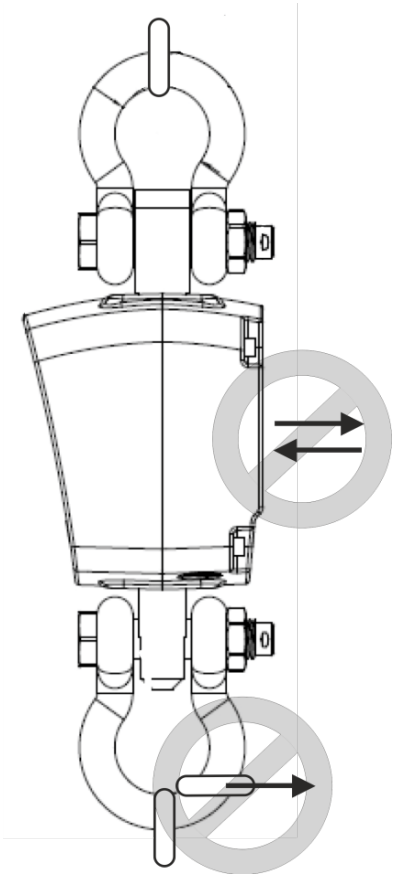

Do not push or pull

Do not pull the hook horizontally

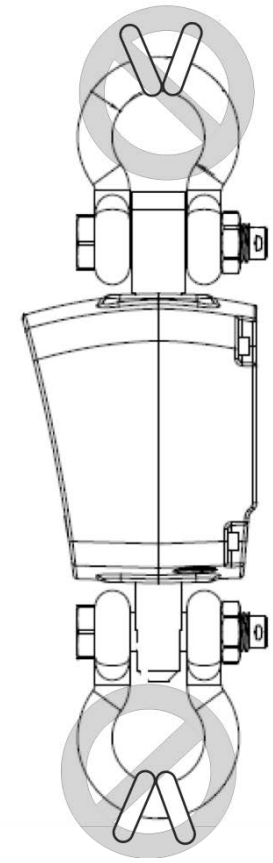

Do not use multiple suspensions

6.3 Turn on/off

Switching On

⇨ Press the **ON/OFF** button on the balance keyboard. The display lights up and the balance carries out a selftest. As soon as the weight display appears, the balance is ready for weighing.



Switch on only possible at the keyboard of the balance.

Switching Off

⇨ Press the **ON/OFF** button on the balance keyboard.

6.4 Set balance to zero

In order to obtain optimal weighing results, reset to zero the balance before weighing.

⇨ Unload the balance

⇨ Wait for stability display

⇨ Press the **ZERO** button.
Zero display and the **[▼]** symbol over →0← appears.

6.5 Taring

⇨ Suspend preload.
Press the **TARE** button, the zero display and the **[▼]** above **TARE** will appear.
The weight of the container is now internally saved.

⇨ Weigh the material, the net weight will be indicated.

⇨ After removing the preload weight appears as negative display.

⇨ To delete the tare value, remove load from crane scales and press the **ZERO** button.

6.6 Weighing

⇨ Loading the crane scales.
The weight value will be displayed at once. After standstill control the **[▼]** above  will appear.

Overload warning

Overloading exceeding the stated maximum load (max) of the balance, minus a possibly existing tare load, must be strictly avoided. This could cause damage to the balance.
Exceeding the maximum load is indicated by the display **„--ol-“.** Unload balance or reduce preload.

6.7 Record weight value (freeze)

⇨ Press the **HOLD** button to „freeze“ or to record the current weight value.
It remains displayed until it is deleted. The **[▼]** above **HOLD** appears.

⇨ In order to delete the "frozen" or the recorded weight, press the **HOLD** button.
The [▼] above **HOLD** extinguishes.

6.8 Totalization

With this function the individual weighing values are added into the summation memory by pressing the M+ key and edited when an optional printer is connected.

- With active totalizing function the **[▼]** above „M+“ appears.
- The totalizing function is not active when the weight is under 20d.
- Only stable weighing values can be totalized.

⇨ Hook-on the item to be weighed **A**.
Wait for stability display, then press the **M+** button.
"ACC01" followed by the weight value will be displayed. The weighing value is added into the summation memory.

⇨ Remove the weighed good. More weighed goods can only be added when the display ≤ zero.

⇨ Suspend the item to be weighed **B**.
Wait for stability display, then press the **M+** button. The weighing value is added into the summation memory. Number of weighings, "ACC02" followed by the total weight will be displayed for 2 sec. After that the current weighing value is displayed.

Add more weighed goods as described before.
Please note that the crane scales must be unloaded between the individual weighing procedures.
You can repeat this process until the capacity of the crane scales is exhausted.

Display sum total:
When zero is displayed, press the **M+** key, the number of weighings followed by the total weight will be displayed for 2 sec.

Delete sum memory:
When zero is displayed, press the **M+** key, the number of weighings followed by the total weight will be displayed for 2 sec. During this display press the **ZERO** key anew. The data in the summation memory are deleted. The [▼] above “**M+”** extinguishes

7. Menu

Navigation in the menu:

Call function	⇨ Switch-on balance and during the selftest press the **TARE** button. "**P1 - - -**" will be displayed. ⇨ Enter password "000" : Select a number by the **M+** key Increase the numeric value using the **TARE** key Confirm by the **ZERO** key. The first function „F0 cal“ is displayed.
Select function	⇨ The **TARE** button allows to select the individual functions one after the other.
Select setting	⇨ Confirm the selected function by the **ZERO** button. The current setting will be displayed.
Change settings	⇨ Use the **TARE** button to switch over into the available settings.
Confirm setting	⇨ Press the **ZERO** button, the balance returns into the menu.
Exit menu / Return to weighing mode	⇨ Press the **M+** key.

Overview:

Function	Description			
F0 cal	Adjustment, see chap. 8			
F1 cap Set weighing balance capacity (max) / balance type	threer	600	Three-range balance	**Modifications may only be carried out by a specialist with competent knowledge.**
		1500		
		3000		
		6000		
		12000		
	single	600	Single-range balance	
		1500		
		3000		
		6000		
		12000		
	Dual r	600	Multi-range balance	
		1500		
		3000		
		6000		
		12000		
	Dual i	600	Multi-interval balance	
		1500		
		3000		
		6000		
		12000		
F2 sp	Slow	Reaction speed selectable slow, medium, fast		
	mid			
	fas			
F3 inp	Display internal resolution			
F4 GRA	Gravitation constant at place of installation			
F5 com	mode	wifi	Not documented	
		blue	Not documented	
		off	Interfaces switched-off	
	baud	600	Baud rate	
		1200		
		2400		
		4800		
		9600		
F6 ti	00:00	Setting time		
F7 ti	00.00.00	Setting date		
F8 st	on	Multitare switched on		
	off	Multitare switched off		
F9 of	0	Automatic switch-off function is disabled		
	5 min	Weighing system will be turned off after 3 min.		
	10 min	Weighing system will be turned off after 5 min.		
	20 min	Weighing system will be turned off after 15 min.		
	30 min	Weighing system will be turned off after 30 min.		
F10 no	XXXXXXX	Not documented		

7.1 Description of individual functions

7.1.1 Automatic switch-off function „AUTO OFF“

The crane scales are switched off automatically, when the keyboard is not actuated and when in the set switch-off time no change of weight has been measured. In order to finish the Auto-Off mode, press any key on the keyboard or on the remote control.

⇨ Call up function "F9 Of", see chapter 7

⇨ Press the **ZERO** key, the current setting appears.

⇨ Select the desired setting using the **TARE**-key.

F9 OF	**Of 0**	Function deactivated
	Of 3	Balance will be turned off after 3 min.
	Of 5	Balance will be turned off after 5 min.
	Of 15	Balance will be turned off after 15 min.
	Of 30	Balance will be turned off after 30 min.

⇨ Confirm entry by **ZERO** button.

⇨ Use **M+** key to return to the weighing mode.

7.1.2 Display background illumination

⇨ In weighing mode press and hold the **ZERO** key, until the current setting appears.

⇨ Select the desired setting using the **TARE**-key.

bl on	Continuous background lighting
bl of	Background illumination off
bl Au	Automatic background illumination only when loaded or key pressed.

⇨ Confirm entry by **ZERO** button.

8. Adjustment

⇨ Switch-off balance and attach a carrying help if necessary.

⇨ Switch-on balance with attached carrying help and during the selftest press the **TARE** button. "**P1 - - -**" will be displayed.

⇨ Enter password "000" :
Select a number by the **M+** key
Increase the numeric value using the **TARE** key
Confirm by the **ZERO** key. The first function „F0 cal“ is displayed.

⇨ Press the **ZERO** button, „UnLoAD“ will be displayed.

⇨ Unload the balance and wait until the **[▼]** above  appears.

⇨ Press the **ZERO** button, the currently set adjustment weight is displayed.

⇨ In order to change, select the number to be changed by the **M+** button and set the desired value using the **TARE** button, the active digit flashes.

⇨ Confirm by the **ZERO** button, „LoAd“ will be displayed.

⇨ Attach the adjustment weight and wait until the **[▼]** above  appears

⇨ Press the **ZERO** button.

⇨ After successful adjustment the balance carries out a selftest, then it automatically returns to weighing mode.
An adjusting error or incorrect adjusting weight will be indicated by the error message; repeat adjustment procedure

9. Error messages

Error message	Description	Possible causes / Elimination
Err 1	Wrong date	⇨ *Enter date in format "yy;mm;dd", see chap. 7 "F7 da"*
Err 2	Wrong time	⇨ *Enter time in format* "hh;mm;ss"*, see chap. 7 "F7 da"*
Err 4	Error during zero setting	⇨ Zero range exceeded ⇨ Check if the balance is not loaded
Err 5	Keyboard error	⇨ Improper operation of the balance
Err 6	Value outside the A/D changer range	⇨ Damaged weighing cell ⇨ Damaged electronics
Err 7	Error "Determination of percentage"	⇨ Increase the value to >0.5 d
Err 8	Incorrect adjusting weight	⇨ Check value for adjustment weight, see chap. 1
Err 9	The displayed weight is permanently changing	⇨ Draught/air movement ⇨ Table/floor vibrations ⇨ Weighing pan has contact with other objects.
Err 10	No WLAN connection	⇨ Check menu setting "F5 com➡mode➡wifi"
Err 11	Error "Communication log"	⇨ Check the communication settings
Err 12	Error "Totalizing"	⇨ Number of totalizing operations > 99 ⇨ Capacity of balance exhausted
Err 15	Error "Gravitational constant"	⇨ Value out of range 09.xx -1.0xx
Err 17	"Taring" error	⇨ Taring range exceed or not achieved
Err 19	Unable to initialise zero point	⇨ Measuring cell defective / overloaded ⇨ Object on weighing pan / contact ⇨ Main board defective ⇨ Adjustment required
- - ol - -	Maximum load exceeded	⇨ Reduce load ⇨ Check whether the balance has been damaged
--lo--	Underload	⇨ Negative weight, check platform and restart or adjust.
Fai l h / fai l l / fai l	Adjustment error	⇨ Check value for adjustment weight, see chap. 1 ⇨ Repeat adjustment process
Ba lo / lo ba	Capacity of rechargeable battery exhausted	⇨ Recharge battery

Should other error messages occur, switch balance off and then on again. If the error message remains inform manufacturer.

10. Maintenance, Repair, Cleaning and Disposal

 **Danger**	**Risk of injury and risk of material damage!** **The crane scales are part of a hoisting device!** **For a safe operation please observe the following:** ⇨ Have carried out a regular maintenance by trained specialized staff ⇨ Carry out regular maintenance and care, see chapter 10.3 and 10.4 ⇨ Have the parts exchanged only by trained specialized staff. ⇨ If there arose discrepancies with the safety checklist, the balance must not more be put into operation. ⇨ Do not repair the crane scales by yourself. Repair may only be carried out by service partners authorized by Messrs. KERN.

10.1 Cleaning and Disposal

 **CAUTION**	**Damage on the crane balance!** ⇨ Do not use any industrial solutions or chemicals

⇨ Clean the keyboard and the display with a soft cloth soaked in mild window cleaning agent.

10.2 Regular maintenance and care

▲ The regular 3-month maintenance may only be carried out by an expert with competent knowledge of working with crane scales. Thereby the national regulations for prevention of accidents as well as the working, operation and safety regulations of the owner-operator.

▲ To check the dimensions only use suitable test devices.

▲ The regular 12-month maintenance must only be carried out by trained specialized staff (KERN customer service).

▲ The results of the maintenance must be written down in the checklist (chapter 10.4).

▲ The additional results of the extended maintenance have to be entered in the checklist (chapter 11.1).

▲ The replaced spare parts also must be entered, (chapter 11.2)

Regular maintenance:

Initial start-up, every **3 months** or definitely after **12500 weighings**	▪ Check all dimensions, see checklist chap. 10.4 ▪ Check the shackle or the eyelet for wear and tear, such as e.g. plastic deformation, mechanical damage (unevenness), notches, striation, cracks, corrosion, thread damage and torsions. ▪ Check the application of the safety bracket on the hook, moreover check for fault and correct function ▪ For balances of big construction size: Check that the split pin and the nut on the shackle are not loose If a dimension exceeds the admitted deviation from the original dimension (see checklist, chap. 10.4) or if other discrepancies have been found, the balance must be repaired at once by trained specialized staff (KERN customer service). Never do repair it by yourself! Take balance out of operation immediately! All repairs and spare parts must be documented by the service partner (see list, chap. 11.2).
Every **12 months** or in any case after **50000 weighings**	▪ If the enhanced maintenance has to be carried out by trained staff (KERN customer service). At this general revision all load carrying parts must be checked for gaps with magnetic powder
Every **5 years** or anyway after **250000 weighings**	▪ All load carrying parts have to be exchanged by trained specialized staff (KERN customer service).
Every **10 years** or anyway after **500 000 weighings**	▪ Replace the crane balance entirely

Note
During the revision watch out for wear and tear according to the following drawings (chap. 10.4).

10.3 Checklist „Regular maintenance“, (see chapter 10.3)

Original dimensions crane scales, serial no.: …… Capacity ……										
Upper shackle					**Lower shackle**					**Anchor eyelets**
a (mm)	b (mm)	c (mm)	Wear and tear	Split pin&Nut	a (mm)	b (mm)	c (mm)	Wear and tear	Split pin&Nut	**Clearance f [mm]**
Date …… **Tester ……**										

***These data can be found in the document attached to the balance. Please keep this document always available.**

	Upper shackle					**Lower shackle**					**Anchor eyelets**		
	a	**b**	**c**	Wear and tear (see grey fields)	Split pin & Nut	**a**	**b**	**c**	Wear and tear (see grey fields)	Split pin & Nut	Clearance **f**	**Date**	**Tester**
Max. admitted variation	5 %	0 %	5 %	No deformation or cracks	Tight fit	5 %	0 %	5 %	No deformation or cracks	Tight fit	1%		
Revision prior to first use													
3 months / 12 500 x													
6 months / 25 000 x													
9 months / 37 500 x													
12 months / 50 000 x													
15 months / 62 500 x													
18 months / 75 000 x													
21 months / 87 500 x													

	Upper shackle					**Lower shackle**					**Anchor eyelets**		
	a	**b**	**c**	Wear and tear (see grey fields)	Split pin & Nut	**a**	**b**	**c**	Wear and tear (see grey fields)	Split pin & Nut	Clearance **f**		
Max. admitted variation	5 %	0 %	5 %	No deformation or cracks	Tight fit	5 %	0 %	5 %	No deformation or cracks	Tight fit	1%	**Date**	**Tester**
Revision prior to first use													
24 months/100 000 x													
27 months /112 500 x													
30 months /125 000 x													
33 months /137 500 x													
36 months/150 000 x													
39 months /162 500 x													
42 months /175 000 x													
45 months /187 500 x													
48 months/200 000x													
51 months /212 500 x													
54 months /225 000 x													
57 months /237 500 x													
60 months **/250 000x**	➔ All load carrying parts have to be exchanged by a service partner authorised by KERN.												

bold letters = this maintenance work has to be carried out by a service partner authorized by KERN.

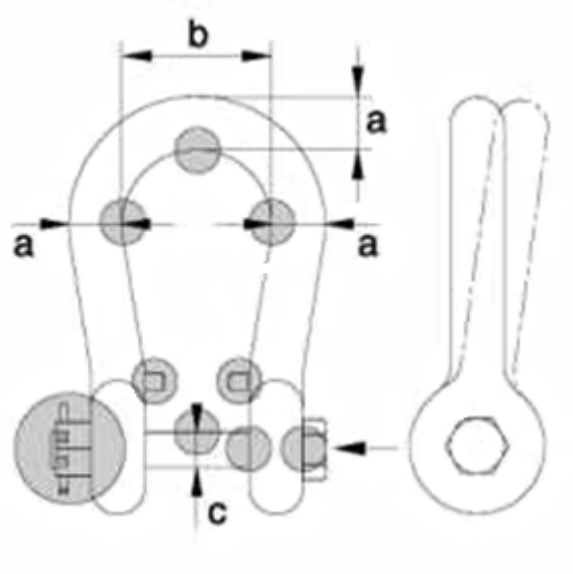
b
a
a
a
c

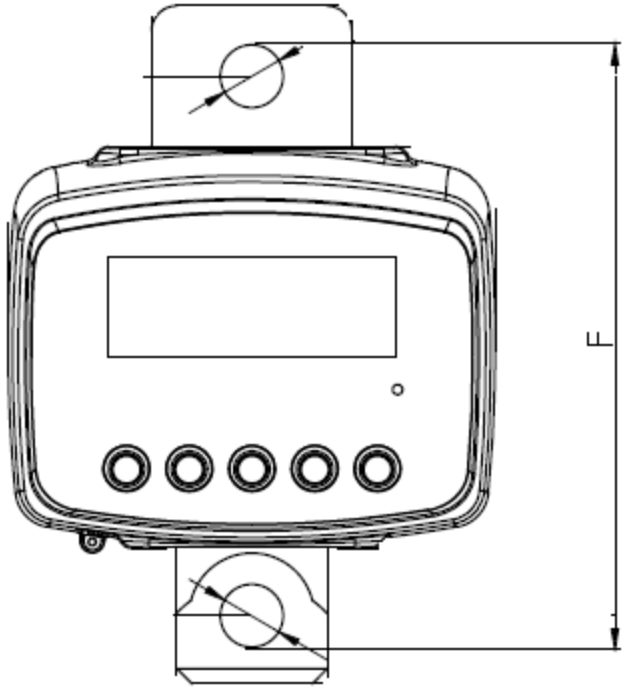
F

11. Enclosure

11.1 Checklist „Enhanced maintenance“ (General revision)

The enhanced maintenance has to be carried out by a service partner authorized by KERN.

Crane scales		Model …….. Serial no. ……..					
Interval	Magnetic powder test for cracks	Upper shackle	Lower shackle	Anchor eyelets	Date	Name	Signature
12 months/50,000 x							
24 months/100,000 x							
36 months/150,000 x							
48 months/200,000 x							
60 months/250,000 x							
72 months/300,000 x							
84 months/350,000 x							
96 months/400,000 x							
108 months/450,000 x							
120 months/500,000x	➔ Replace crane scales entirely						

11.2 List „Spare parts and repair of safety-relevant parts“

Repair has to be carried out by a service partner authorized by KERN.

Crane scales	Model …….. Serial no. ……..			
Part	**Action**	**Date**	**Name**	**Signature**

Crane scales	Model …….. Serial no. ……..			
Part	**Action**	**Date**	**Name**	**Signature**